/ HC-SL

Mail & Logistic

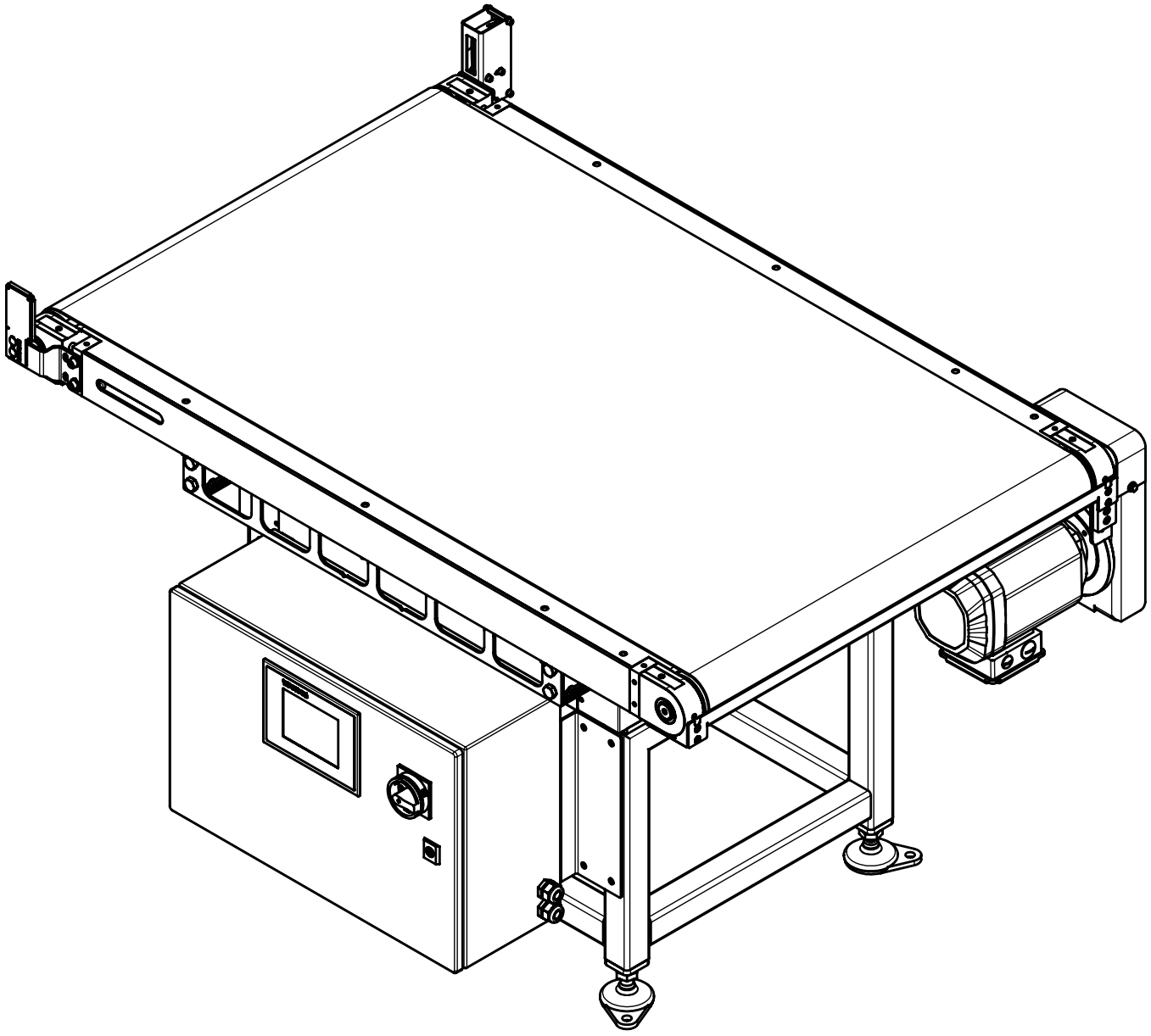

Technical Data

WIPOTEC

/ Technical Data **HC-SL**

Application: CEP, E-commerce, Intralogistics, Industry

Basic Data

Machine Type	HC-SL-1-SI	HC-SL-2-SI	HC-SL-3	HC-SL-4-SI
Material of machine	powder-coated steel frame in bending construction (RAL 7035)			
Unit weight	140–190 kg	160–240 kg	180–270 kg	> 250 kg
Protection class	IP54			
Temperature range	0 °C (+5) to +40 °C (depending on application)			
Transport speed	max. 2.5 m/s	max. > 3.4 m/s [1]		
Drive	Standard: 3 × asynchronous, upgradeable to 6			
Working height low speed (up to 1.5 m/s) (A)	500–600 [2] / 550–650 [2] / 600–750 [2] / 700–850 … up to 1,100–1,250 [1]	420–550 [2] / 500–650 [2] / 600–750 [2] / 700–850 … up to 1,100–1,250 mm		550–650 [2] / 600–700 / 650–750 … up to 1,100–1,200 [1] mm
Working height high speed (from 1.5 m/s) (A)	500–600 [2] / 550–650 [2] / 600–750 [2] / 700–850 … up to 1,100–1,250 [1] mm	420–550 [2] / 450–550 [2] / 500–600 [2] / 550–650 [2] / 600–700 [2] / 650–750 … up to 1,100–1,200 mm		550–650 [2] / 600–700 / 650–750 … up to 1,100–1,200 [1] mm
Noise level	max. 65 dB			
Rated voltage control	L1/N/PE 115/230 VAC [1]			
Rated voltage drive	L3/N/PE 380/460 VAC [1]			
Rated frequency	50/60 Hz			
Connected load	depending on application			
Approvals	MID [1]			

Controller Data

Machine Type	HC-SL-1-SI	HC-SL-2-SI	HC-SL-3	HC-SL-4-SI
Display and operation	5.7"/10.4" colour-TFT display with touch screen VGA-resolution			
Available dialog languages	English, French, German, Dutch, Italian, Danish, Finnish, Bosnian, Portuguese, Croatian, Turkish, Spanish, Russian, Polish, Hungarian, Swedish, Czech, Slovak [1]			
Interfaces	4 serial, optional: RS232, RS422, RS485 2 × Ethernet, 1 × Fieldbus (Profinet or Ethernet-IP)			
Alibi storage	optional			
Digital I/O	1 Input (upgradeable to 4) [1] 2 Outputs (upgradeable to 4) [1]			

[1] Further on request

[2] Working height only possible with free-standing control cabinet

Weighing Details

Machine Type	HC-SL-1-SI	HC-SL-2-SI	HC-SL-3	HC-SL-4-SI
GWR (gross weight range)	30,000 g	60,000 g [1]		60,000 g/150,000 g
e (min. calibration value)	≥ 5 g	≥ 10 g		≥ 20 g/≥ 50 g
d (display value)	≥ 0.5 g	≥ 1 g		≥ 2 g/≥ 5 g
n (graduation steps)	3 × 6,000	2 × 6,000		2 × 6,000

Conveyor Dimension

Machine Type	HC-SL-1-SI	HC-SL-2-SI	HC-SL-3	HC-SL-4-SI
Width (B)	400/500/600/700 mm	600/700 mm	800/900/1,000 mm	1,200/1,400/1,600 mm
Roller diameter	60 mm	80 mm	80 mm	80 mm
Length (C)	600/700 ... up to 1,200 mm	800/900 ... up to 1,600 mm	800/900 up to 1,600 mm optional: 1,900–2,700 mm	1,100/1,200 ... up to 2,700 mm

Notes

[1] Further on request

/Technical Drawing **HC-SL**

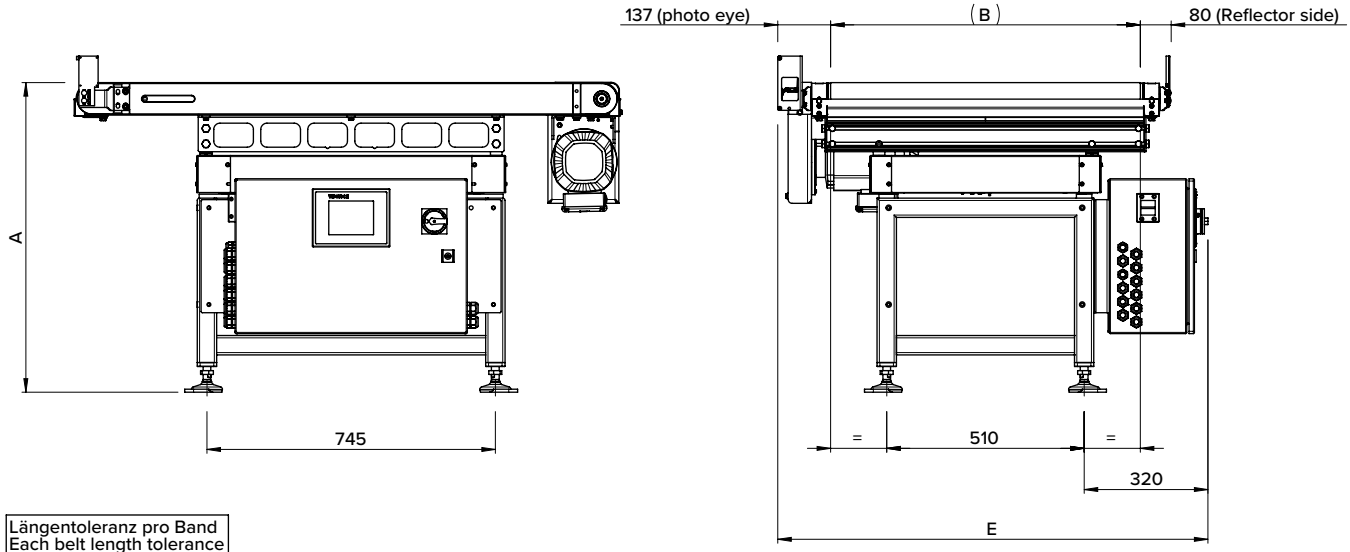

Längentoleranz pro Band Each belt length tolerance	
BL < 2000	-14 +2 mm
BL ≥ 2000	-9 +9 mm

Transportrichtung

working direction

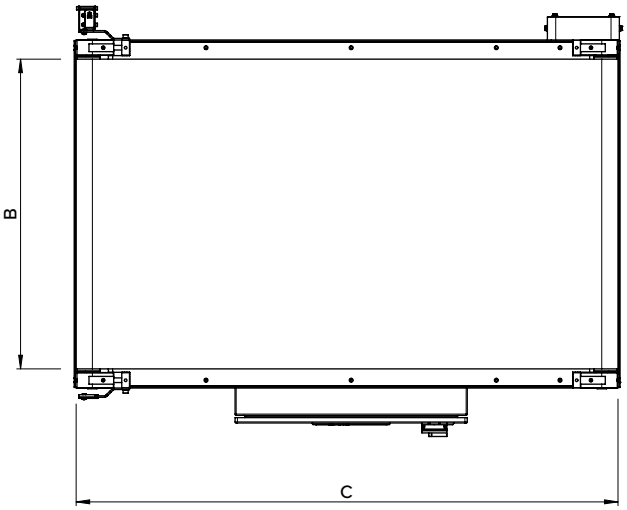

A Working height
B Conveyor width
C Conveyor length
E Total width

All measurments in mm
Drawing shows sample version

Headquarters
WIPOTEC GmbH
Adam-Hoffmann-Str. 26
67657 Kaiserslautern
Germany

T +49 631 34146-0
F +49 631 34146-8690
info@wipotec.com
wipotec.com

240304 – All errors and misprints reserved. Data subject to modifications. Stated trademarks are property of the respective owners.